PHOENIX®
DURABILITY X DESIGN™

Guard Pro™ LO HAZ

Hazardous Rated LED Low Bay/Area Light

UL844 hazardous rated round low bay designed for various Class I, Division 2 environments

Versatile fixture with various light output, mounting, lens, optic, and color temperature options making it suitable for many applications

Capable of retrofitting to various Eaton Crouse Hinds and Appleton MercMaster III fixtures

Key Applications

Heavy industrial storage facilities
Paper & pulp mills
Wastewater treatment plants
Loading dock platforms
Offshore drilling environments
Chemical processing and storage facilities
Power plants
Petrochemical processing and storage facilities
Mining production & processing

Compliances

UL/cUL Listed to:

- UL 1598 Suitable for Wet Locations
- UL 1598A Marine Outside Type (Saltwater)
- UL 844 Hazardous Locations
  - Class 1, Division 2 Groups A, B, C, D
  - Class II, Division 1 Groups E, F, G
  - Class II, Division 2 Groups F, G
  - Class III

IP66
ABS

Specifications

Construction	Die cast aluminum
Finish	Powder coat, matte finish
Hardware	Marine grade (316) stainless steel external hardware
Light source	2,600 lumens – 20W 5,200 lumens – 40W 7,800 lumens – 60W CRI > 70 CCT 3000K, 4000K, 5000K, Amber LEDs 60°, 120° or Type II optic options 50,000 hour rated life
Lens	Flat glass - clear or diffuse Convex glass - clear or diffuse
Wiring	3/4 NPT
Power source	120-277V, 50-60 Hz; 277-480V, 50-60 Hz 0-10V dimming capability
Surge protection	6kV surge protection (driver)
EMB	Emergency battery backup 90 minute duration, 1000 lumens
Ambient operating temperature	GPL-20: -40°C to + 65°C (T5) GPL-40: -40°C to + 65°C (T5) GPL-60: -40°C to + 60°C (T3C)
Mounting	Surface mount (standard) Optional harp mount, stanchion mount, wall mount, and retrofit adapter (Appleton Mercmaster III) capability Standard fixture is compatible with Crouse-Hinds™ series HID mounting base
Estimated weight	13.4 lb (6.1 kg)
Warranty	5 years

For IES files, see website or contact factory

Phoenix Lighting 8711 West Port Avenue Milwaukee, WI 53224 USA
Phone: +1 414.973.3300 Toll Free: 800.438.1214 **www.phoenixlighting.com**

Guard Pro™ LO HAZ

Hazardous Rated LED Low Bay/Area Light

Dimensions

Surface Mount (standard)

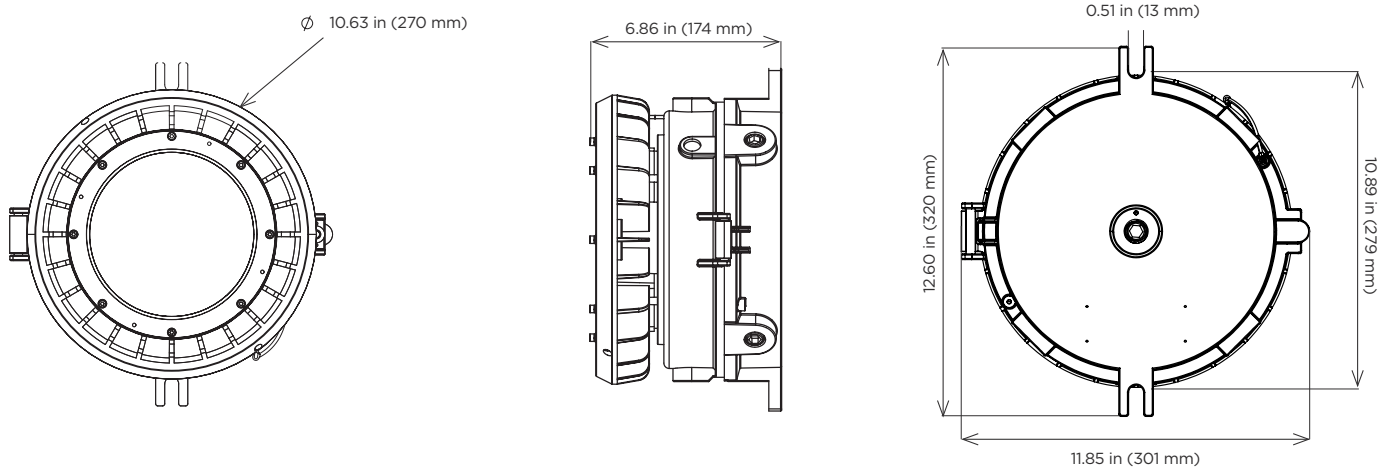

Ordering Information

Example: GPL-20-FGC-60-120-277-30K-HAZ

Fixture	Wattage	Lens	Optics	Voltage	CCT	Mounting[2]	Option	HAZ
GPL	20	FGC	60[1]	120-277	30K	B	EMB	HAZ
	40	FGD	120	277-480	40K	C		
	60	CGC	T2		50K	D		
		CGD			AM[4]	R[3]		

Wattage

- 20 — Up to 2,600 lumens, 20W
- 40 — Up to 5,200 lumens, 40W
- 60 — Up to 7,800 lumens, 60W

Lens

- FGC — Flat glass, clear lens
- FGD — Flat glass, diffuse lens
- CGC — Convex glass, clear lens
- CGD — Convex glass, diffuse lens

Voltage

- 120-277 — 120-277V, 50-60Hz
- 277-480 — 277-480V, 50-60Hz

Optics

- 60[1] — 60° optic
- 120 — 120° optic
- T2 — Type II optic

Options

- 30K — 3000K
- 40K — 4000K
- 50K — 5000K
- AM[4] — Amber LEDs

Mounting[2]

- B — Mounting harp
- C — Wall mount
- D — Stanchion mount
- R[3] — Retrofit adapter

Option

- EMB — 90 minute emergency battery backup

HAZ

- HAZ — UL844 Hazardous Location certified

Notes

1. Only available with clear lens options.
2. Comes standard with surface mount (leave blank).
3. Fixture provided with Appleton MercMaster III retrofit adapter.
4. Contact factory for availability.

Special Projects: We may be able to accommodate your special projects, so please don't hesitate to ask about additional options. Minimum order quantities and/or extended lead times will apply. Contact your Phoenix representative with specific inquiries.

Phoenix Lighting 8711 West Port Avenue Milwaukee, WI 53224 USA
Phone: +1 414.973.3300 Toll Free: 800.438.1214 **www.phoenixlighting.com**

Mounting Options

Mounting Harp (B)

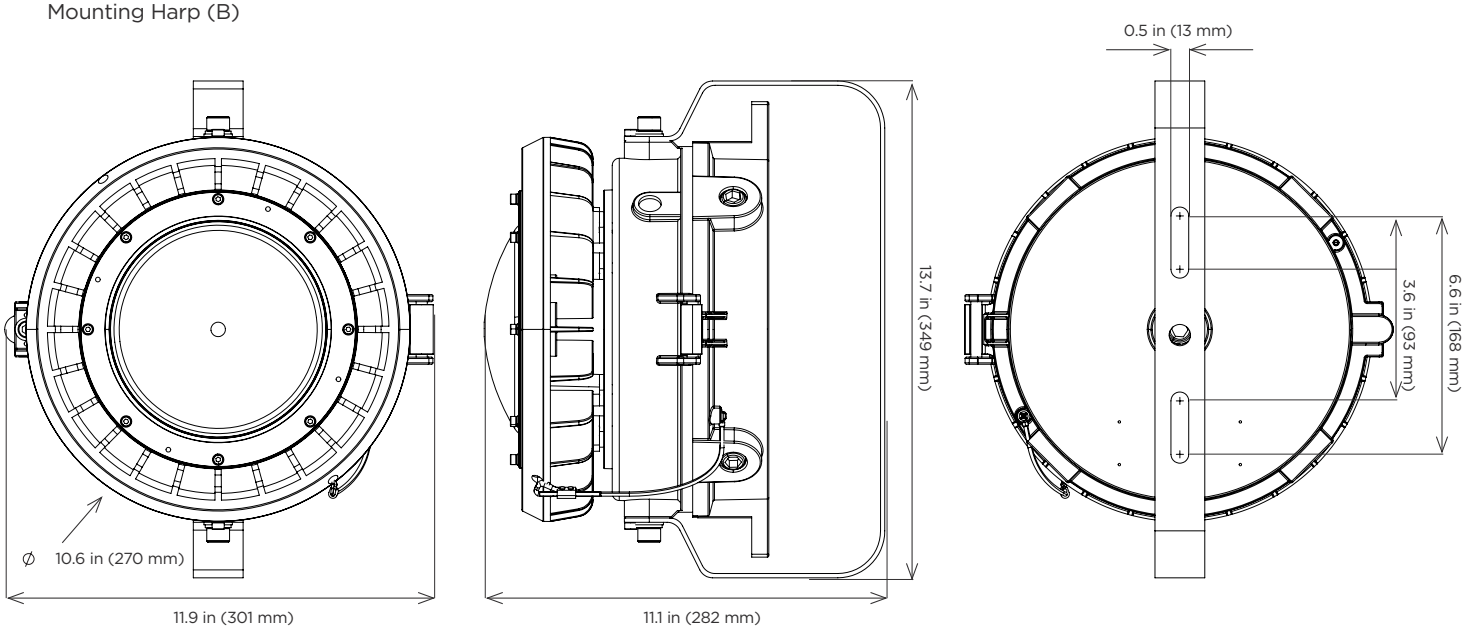

Wall mount (C)

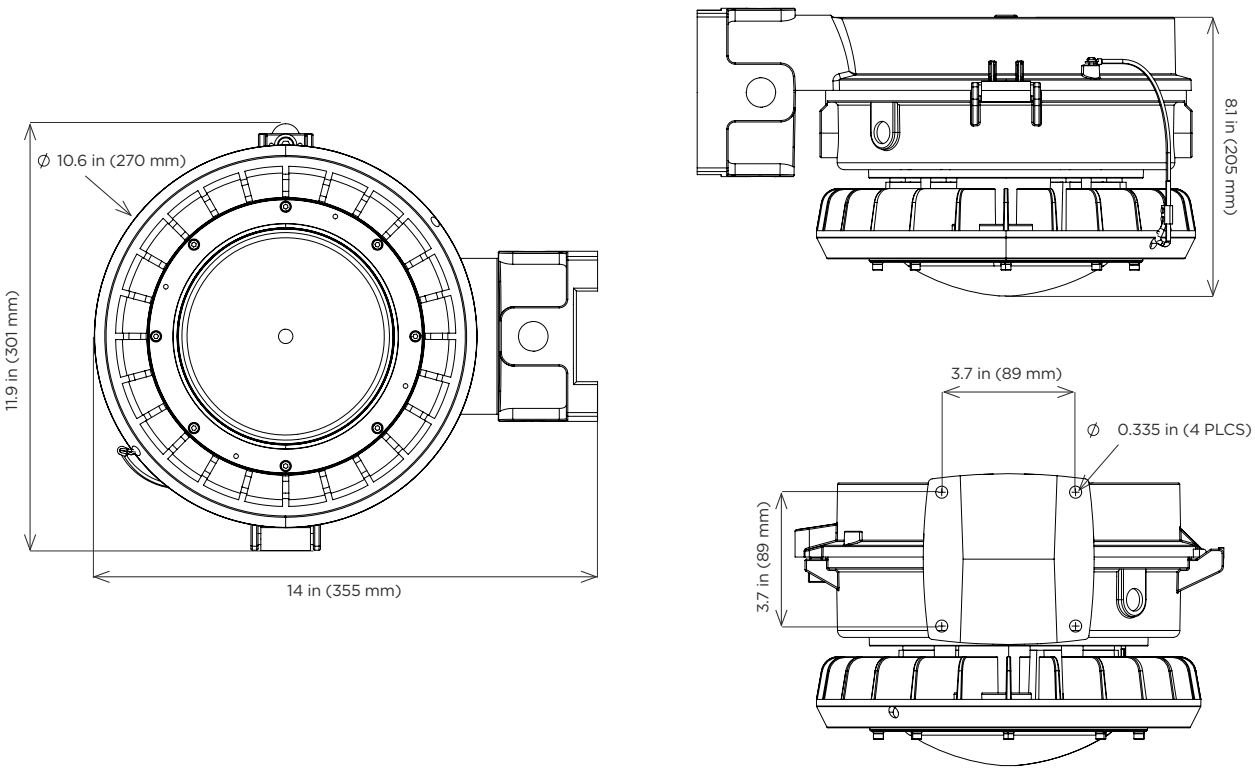

Mounting Options Continued

Stanchion mount (D)

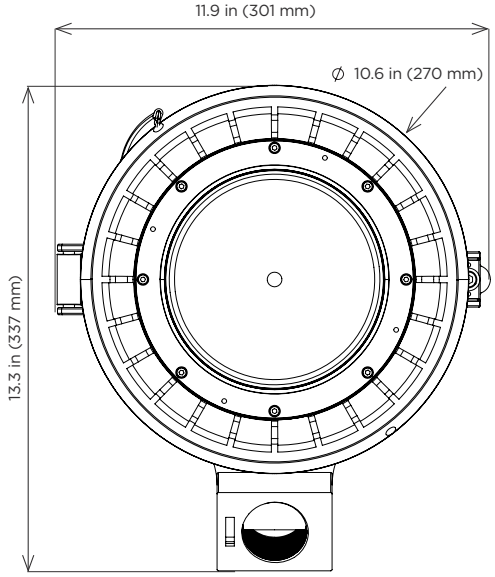

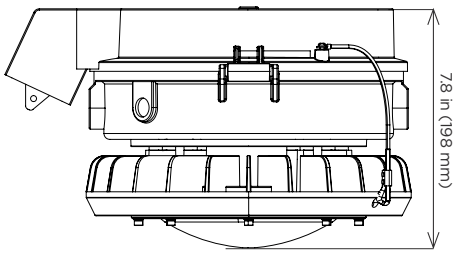

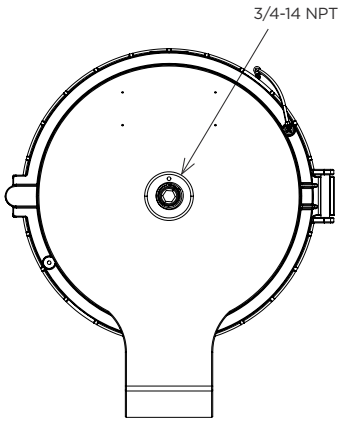

Retrofit adapter (R)

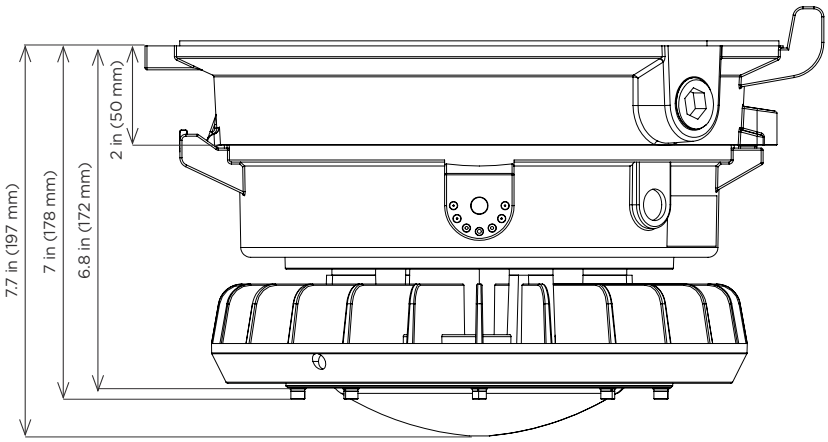

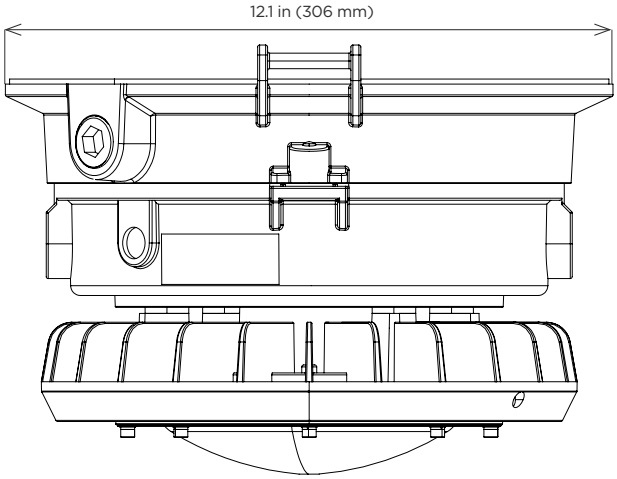

Phoenix Guard Pro Retrofit Adapter for Appleton Mercmaster III

Pendant	Ceiling	Wall	Stanchion
KPA - 75, 100	KPC - 75	KPWB - 75	KPS - 125
KPAF - 75, 100	KPC - 100	KPWB -100	KPS -150
KPCH - 75, 100			KPST - 125
			KPST - 160

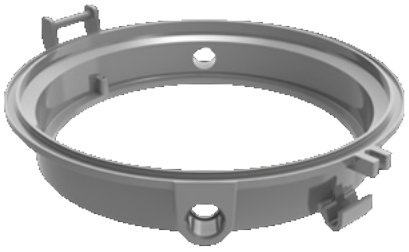

Retrofit Adapter - Appleton MercMaster III

Retrofit Capability (standard fixture)

Phoenix Guard Pro directly retrofits to Eaton Crouse Hinds models listed below (no additional parts needed)

Pendant	Ceiling	Wall	Stanchion	Quad Mount
APM2	CM2	TWM2	M5	QM25
AMP3	CM3	TWM3	PM5	
HM2				

Accessories

Wire Guard
(WG-GPL)

Product design and specifications are subject to change without notice. The most current version of this specification sheet can be found at www.phoenixlighting.com.