PHOENIX®
DURABILITY X DESIGN™

Sturdilite® Master Series

Installation Guide

Wheel Loader 2
Dozer 3
Haul Truck 4
Grader 5
Pickup Truck 6

Dimensions

MST-LO

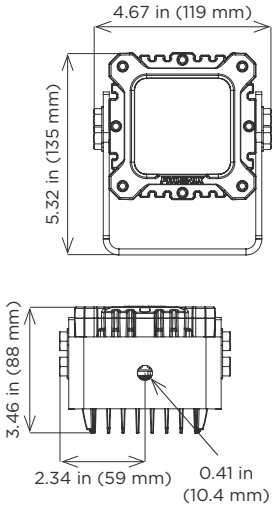

MST-MED

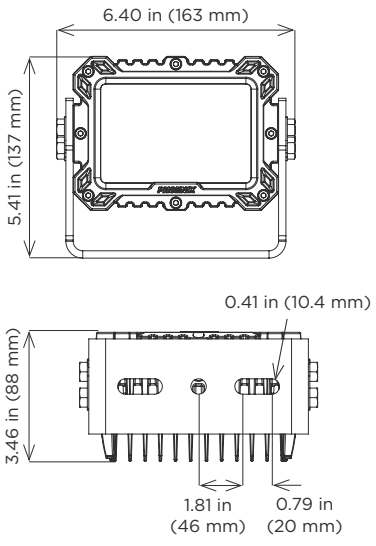

Specifications

Construction	Die cast aluminum housing
Hardware	304 stainless steel external hardware
Light source	Conformal coated LED circuit board 24W (LO) or 48W (MED) Cool white LEDs - effective lumens up to 2500 lumens (LO), up to 5000 lumens (MED) Amber LEDs - effective lumens up to 1825 lumens (LO), up to 3650 lumens (MED) Spot (SP), Flood (FL), Elliptical (EP), and No-Glare (NG) optical patterns
Power source	12-48V DC; 24-48V DC Over-voltage , over-temperature and reverse polarity protection
Ambient operating temperature	-40°C to +65°C Light output regulation in high ambient temperature environments protects the life of the LEDs
Shock & vibration	65G along 3 axes 5 Grms, 100-2200Hz along 3 axes
Salt spray	Tested to ASTM B117 for 1000 hours
Aiming	120° aiming capability, 5° markings on mounting harp Colored aiming indicator designates fixture beam pattern (SP: red, FL: blue, EP: black, NG: silver)
Mounting	304 stainless steel harp - standard Round mounting bracket option for MST-MED (RND)
Estimated weight	MST-LO fixture: 3.0 lb (1.4 kg) MST-MED fixture: 4.5 lb (2.0 kg)

Wheel Loader

Sturdilite® Master Series

- MST-MED-FL
- MST-MED-EP
- MST-MED-NG

- MST-LO-FL

Dozer

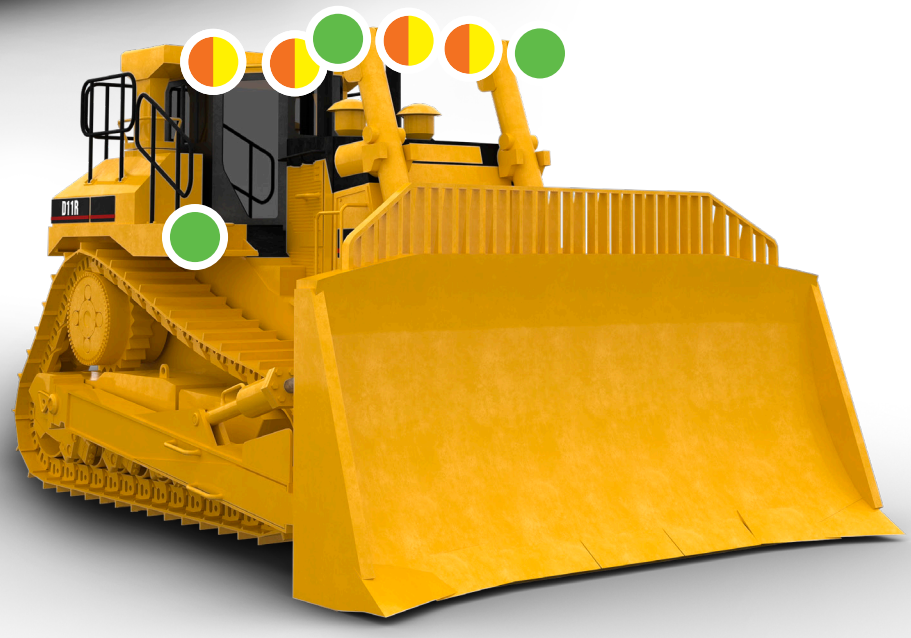

Sturdilite® Master Series

- MST-MED-FL
- MST-MED-EP
- MST-MED-NG

Haul Truck

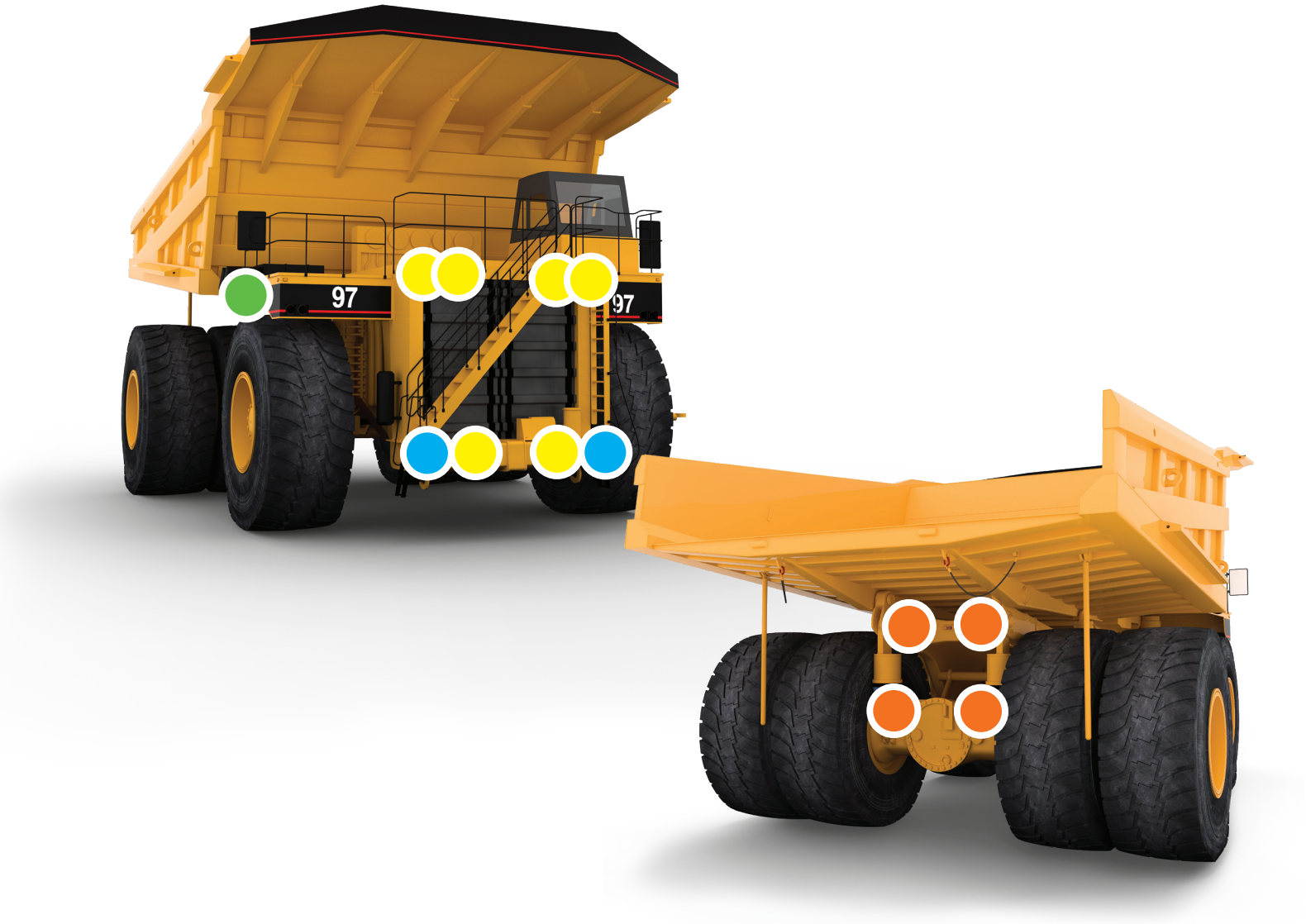

Sturdilite® Master Series

- MST-MED-NG
- MST-MED-EP
- MST-MED-FL
- MST-MED-SP

Grader

Sturdilite® Master Series

- MST-MED-NG
- MST-MED-EP

- MST-LO-FL
- MST-LO-EP

Pickup Truck

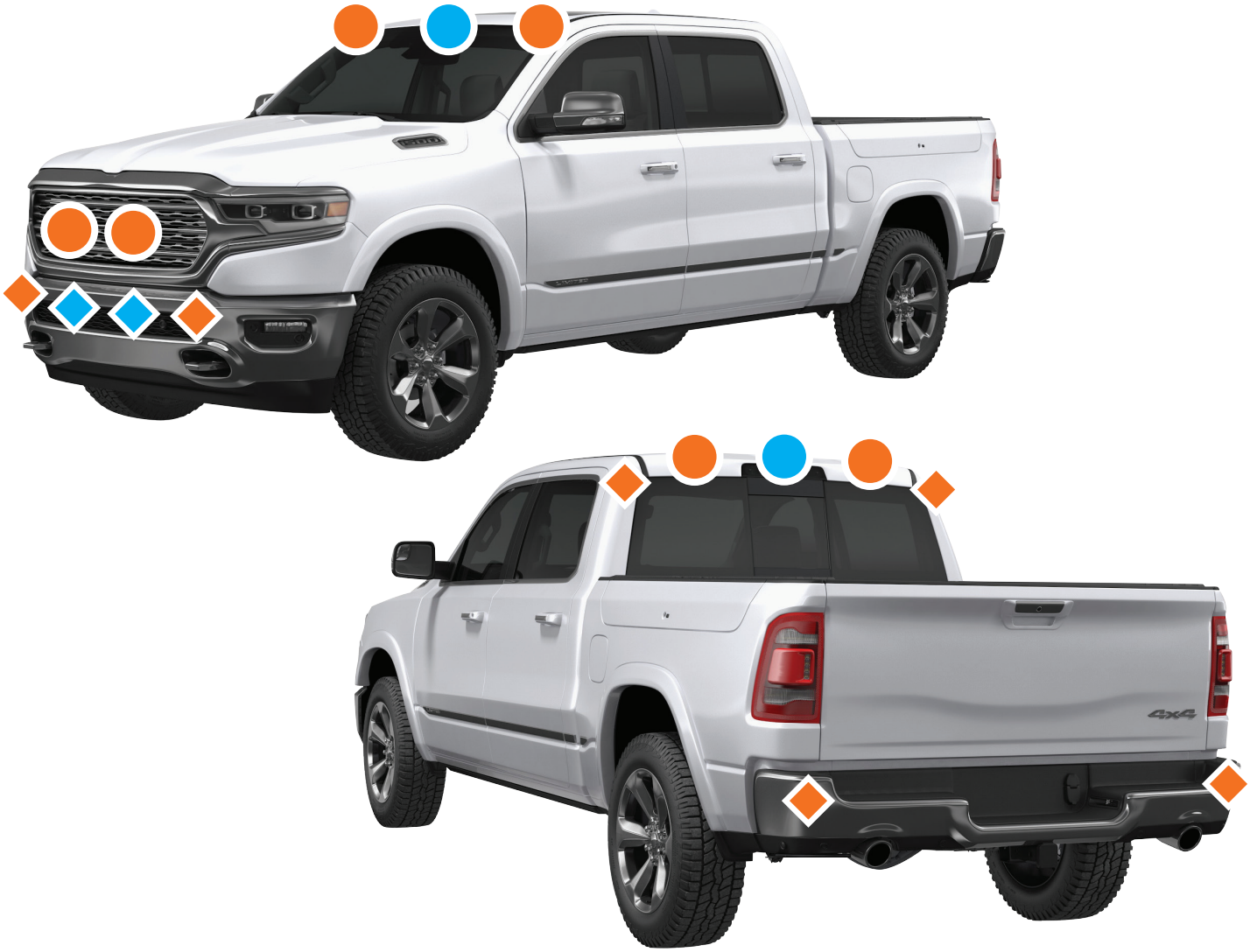

Sturdilite® Master Series

- MST-MED-EP
- MST-MED-SP

- MST-LO-EP
- MST-LO-SP